Data Sheet

Article number: 20343250M1263OS
Description: E+G Levelling foot
GN 343.2-50-M12-63-OS
Note: 0

Measures

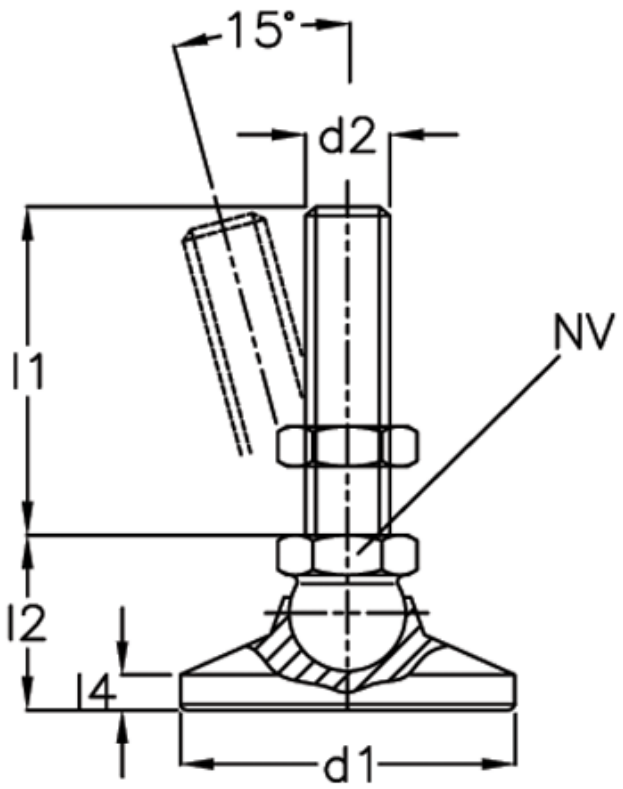

d1 = 50	Static load = 33
d2 = M12	Weight in (g) = 250
l1 = 63	
l2 = 28	
l3 = -	
l4 = 7	
l5 = -	
NV = 17	

Product drawings and brochures of any kind may contain errors for which Brd. Klee A/S cannot be liable.